Zwick Roell

Zwick
Materials testing

Product Information

Servo-hydraulic load frames – HB series, 2-column

CTA: 70966 70967

HB100 with T-slotted platform and mechanical grips

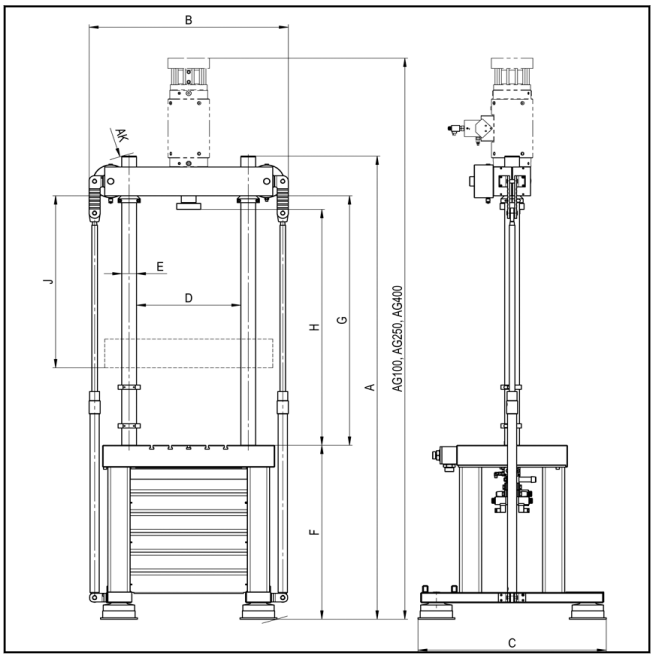

Drawing: HB load frame

Range of application

HB servo-hydraulic testing machines have the testing actuator mounted on the upper crosshead. This makes them extremely versatile in use, especially the version with integrated T-slotted platform, enabling flexure tests and component testing in addition to standard fatigue tests. The load cell can be attached to the lower cross-head or directly to the piston rod, depending on the application.

Description of operation

These 2-column load frames are designed for materials and component testing under dynamic loading in a closed force-flow. The frame is supported on vibration-isolating leveling units so that no appreciable forces are transmitted to the floor during normal operation. Where tests or environmental conditions are critical in nature, the use of optionally available air-springs is advisable; these have a natural frequency of approximately 3 - 6 Hz.

The efficiency of the testing system is enhanced by the especially high axial and lateral stiffness of the HA load frames, enabling higher frequencies and specimen deformations Moreover, high lateral forces which may occur in compression and flexure tests can be absorbed without difficulty.

The frames also feature extremely precise alignment; Following installation of the testing actuator and load cell, alignment accuracy is +0.1 mm per meter separa-tion; at distances below 350mm the offset is constant at 0.05mm. Plane-parallelity of mounting surfaces is equal to or better than 0.03 mm per 100 mm. All fixtures and Zwick load cells are mounted via flanges with centering-spigot.

Advantages and features

- 4 standard nominal ratings from 50 kN to 500 kN
- testing actuator mounted on upper crosshead
- convenient working height
- hydraulic clamping and adjustment for easy posi-tioning of upper crosshead
- comprehensive range of accessories, including hydraulic grips, compression platens, flexure test kit etc.
- safety housing for compliance with CE Machinery Directive
- version with integrated T-slotted specimen ideal for fatigue tests on components

Zwick Roell

Zwick
Materials testing

Product Information

Servo-hydraulic load frames – HB series, 2-column

Technical data

Dynamic nominal force	50	100	250	500	kN
Crosshead clamping	electro-hydraulic	electro-hydraulic	electro-hydraulic	electro-hydraulic	
Crosshead adjustment	electro-hydraulic	electro-hydraulic	electro-hydraulic	electro-hydraulic	
A_{G100} – max. test-frame height with 100mm-stroke actuator	3175 (3675)[1)]	3259 (3759)[1)]	3523 (4023)[1)]	4045 (4545)[1)]	mm
A_{G250} – max. test-frame height with 250mm-stroke actuator	3475 (3975)[1)]	3559 (4059)[1)]	3823 (4323)[1)]	4345 (4845)[1)]	mm
A_{G400} – max. test-frame height with 400mm-stroke actuator	-	3859 (4359)[1)]	4123 (4623)[1)]	4635 (5135)[1)]	
A – max. column height	2690 (3190)[1)]	2690 (3190)[1)]	2900 (3400)[1)]	3250 (3750)[1)]	mm
A_K - tilted dimension for installation	2820 (3320)[1)]	2820 (3320)[1)]	3060 (3560)[1)]	3500 (3980)[1)]	mm
B — max. width of test frame	1079	1079	1197	1525	mm
C – max. depth of test frame	780 (1020)[2)]	780 (1020)[2)]	1130 (1130)[2)]	1130 (1370)[2)]	mm
D_1 – column spacing	565	565	670	800	mm
E – column diameter	80	80	100	120	mm
F - height of top edge of lower cross-head[3)]	950	950	890	900	mm
G – max. test area height[4)]	1510 (2010)[1)]	1510 (2010)[1)]	1705 (2205)[1)]	2120 (2620)[1)]	mm
H – max. working test area height[5)]	1434 (1934)[1)]	1434 (1934)[1)]	1614 (2114)[1)]	2020 (2520)[1)]	mm
J - crosshead displacement range	1000 (1250)[1)]	1000 (1250)[1)]	1150 (1400)[1)]	1250 (1400)[1)]	mm
Weight without T-slotted platform[6)]	899 (945)[1)]	895 (941)[1)]	1361 (1430)[1)]	3660 (3780)[1)]	kg
Weight with T-slotted platform[6)]	1137 (1182)[1)]	1133 (1178)[1)]	2082 (2232)[1)]	4860 (4980)[1)]	kg
Frame stiffness with crosshead separation 1000 mm[7)]	730	730	988	1529	kN/mm
Frame stiffness with crosshead separation 1000 mm[2)]	870	870	1332	1848	kN/mm
Item No.					
Standard height	**077533**	**924779**	**040159**	**079720**	
Standard height with T-slotted platform	**077370**	**079752**	**040158**	**079728**	
Extra-high + 500 mm	**750972**	**077534**	**079755**	**079721**	
Extra-high + 500 mm with T-slotted platform	**077535**	**079753**	**079756**	**079733**	

1) Variant with height increased by 500mm
2) Variant with t-slotted platform
3) With vibration-damping feet
4) Distance between upper and lower crossheads
5) Distance between piston flange and upper crosshead with piston retracted
6) Weight without actuator, load cell and any fixtures
7) Standard table plate

Product Information

Servo-hydraulic load frames – HB series, 2-column

Accessories

Vibration-damping feet
Rubber/air-spring element for impact and vibration isolation, natural frequency 3 - 6 Hz depending on static load, maximum permitted pressure 6 bar.

Description	Item number
Vibration-damping feet for HB 50 / 100	**924749**
Vibration-damping feet for HB 250	**924770**
Vibration-damping feet for HB 500	**935215**

Safety device
Aluminium profile section construction with Makrolon panels enclosing testing machine on all four sides, safety door at front, electrically monitored and interlocked.

Description	Item number
Safety device for HB 50 / 100	**935500**
Safety device for HB 50 / 100 - 500 mm extra height	**1014330**
Safety device for HB 250	**007594**
Safety device for HB 250 - 500 mm extra height	**1014331**
Safety device for HB 500	**079736**
Safety device for HB 500 - 500 mm extra height	**079738**