ModelDSCH(S)Series

Compression & tention
low profile load cell (2t ~ 20t)

The model DSCH(S) is a low profile tension and compression pancake type load cell. All units are machined from a solid billet and sealed with welded diaphragms.

- Alloy steel or stainless steel (17-4PH) construction for high accuracy and corrosion resistance
- Hermetically sealed
- High rated output(3mV/V)

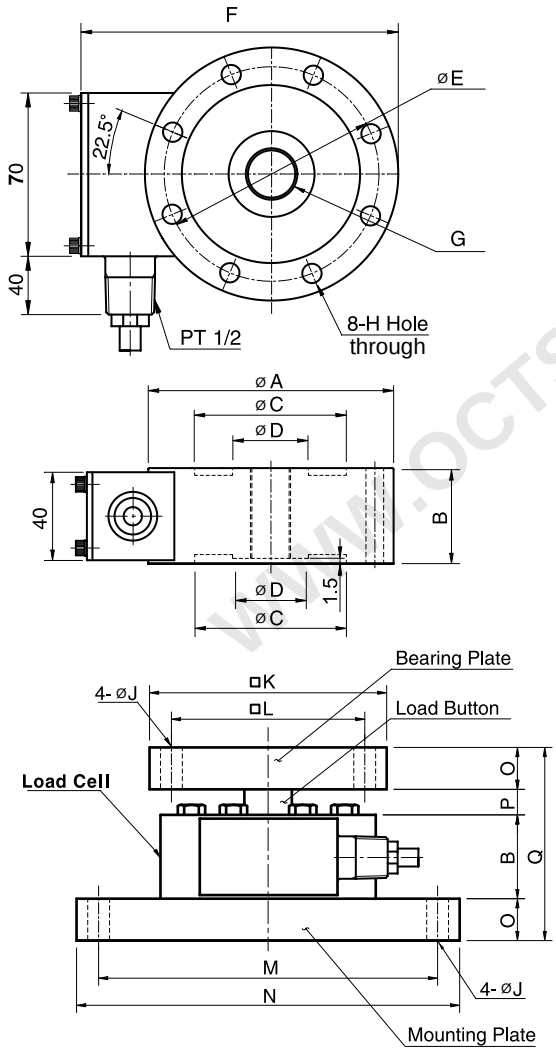

SPECIFICATIONS

MODEL	DSCH, DSCHS
Rated capacity (R.C.)	2, 3, 5, 10, 20t
Rated output (R.O.)	3.0mV/V ± 0.2%
Non-linearity	≤ 0.05% R.O.
Hysteresis	≤ 0.05% R.O.
Non-repeatability	≤ 0.02% R.O.
Creep error	≤ 0.03% in 20min.
Zero balance	±1% R.O.
Compensated temperature range	-10 ~ 70°C
Operating temperature range	-20 ~ 80°C
Temp. effect on rated output	≤ 0.03% LOAD/10 °C
Temp. effect on zero balance	≤ 0.03% R.O./10 °C
Terminal input resistance	350 Ohms ±3.5 Ohms
Terminal output resistance	350 Ohms ±5 Ohms
Insulation resistance (Min.)	2000 MOhms at 50V DC
Excitation voltage	10V(Recommended), 15V(Max.)
Electrial connection	ø7mmx5m(Option 6m), 22AWGx4C
Protection class	meets IP 67
Safe overload	150% R.C
Ultimate overload	300% R.C

ORDERING INFORMA TION

DSCH - 2T

- DSCH: MODEL
- 2T: CAPACITY : 2, 3, 5, 10, 20 ton

DSCH : Painted Alloy Steel
DSCHS : Stainless Steel (17-4PH)

WIRING INFORMATION

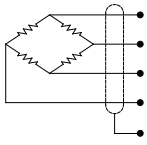

- RED : EXC. (+)
- GREEN : SIG. (+)
- WHITE : EXC. (−)
- BLUE : SIG. (−)
- BARE : GND.

Dimension-mm

Rated Capacity	A	B	C	D	E	F	G	H	J	K	L	M	N	O	P	Q	Weight (kg)
2t (19.61kN)	112	46	81	27	96	147	M16x2P	6.5	12	130	106	185 x105	210 x130	23	13	105	4
3~5t(29.42kN~49.03kN)	118	46	86	34	100	153	M18x1.5P	9	12	130	106	185 x105	210 x130	23	15	107	4
10t (98.07 kN)	138	60	98	50	116	180	M24x2P	11	14	160	126	125 x125	160 x160	30	20	140	6
20t (196.1 kN)	182	80	128	74	154	228	M39x2P	14	14	200	150	160 x160	200 x200	30	35	175	12

⋆ Specifications are subject to change without notice

DEC ,2005

WWW.OCTSOURCES.COM